BMP HIGH SPEED DOORS

MEGAPACK 200

TÜV SÜD

TECHNICAL DATA

OUTDOORS | LARGE OPENINGS | WIND RESISTANCE | ENERGY SAVING | DOUBLE CURTAIN | SOLID STEEL STRUCTURE | FOLDING TECHNOLOGY

MEGAPACK 200 an high speed fold up door designed for large openings, where it is necessary to make large logistics movements.

DOOR THICKNESS	300 mm
WINDOWS	1200 x 300 mm
SEALS	Lateral PVC
SPEED	0,2 - 0,3 m/s
WIND RESISTANCE* *DIFFERENTIAL PRESSURE*	0.45 - 1.6KPa, depending on size (Class 2 - 5 , EN 12424)
WIND SPEED DURING DOOR OPENING	< 20 m/s (72 km/h)
SOUNDPROOFING *STANDARD*	15 dB Rw (ISO 717)
OPERATING TEMPERATURE OPERATING ENVIRONMENT	-10°C a +70°C

*The door, according to the directive 13241/EC, needs to be checked every six months.

WATCH THE VIDEO!

MAIN COMPONENTS

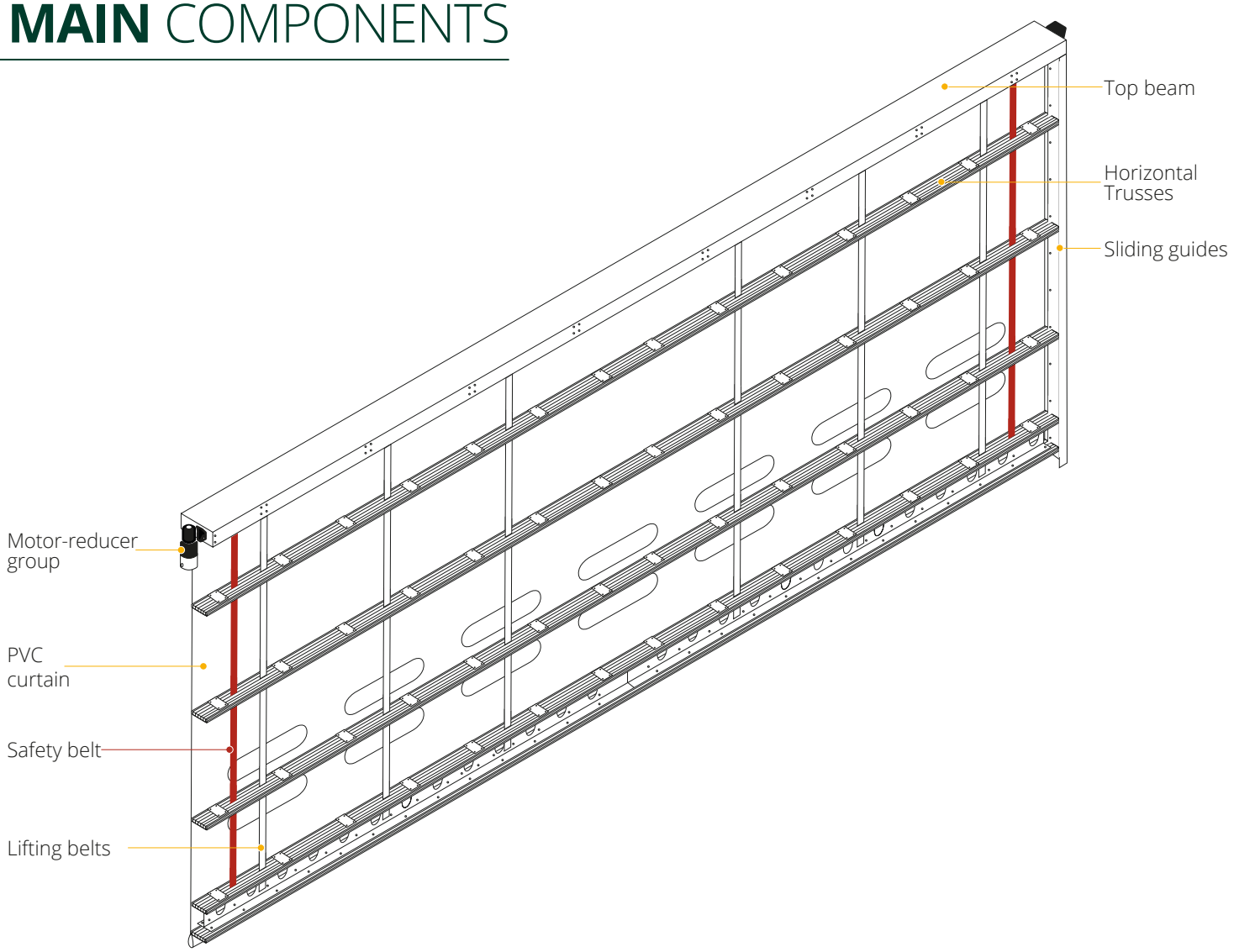

SAFETY **ANTI-FALL**

Self-braking 400V **three phases motors** are installed in direct drive on both sides of the main shaft.
(Function type S1, continuous service)
Reducer group made of painted cast-iron, suitable for continuous operation.
Multiple belts lifting systems prevent falling.
Each side, safety belts are installed to support the entire weight of the panels.
(Average speed 0,1 - 0,2 m/s).

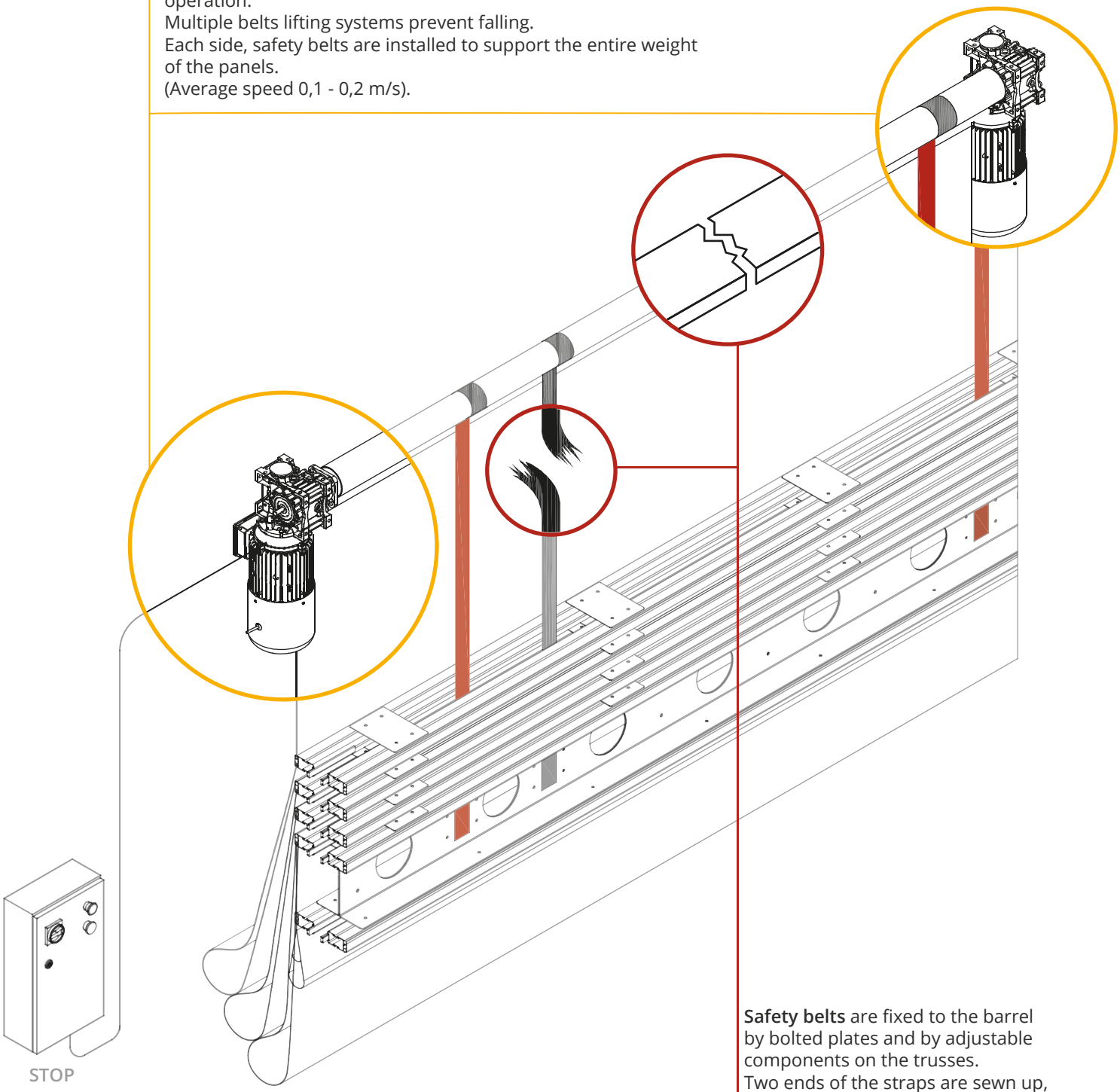

Safety belts are fixed to the barrel by bolted plates and by adjustable components on the trusses.
Two ends of the straps are sewn up, certificated to lift up 2500 kg each belts.

DIMENSIONS **OVERALL**

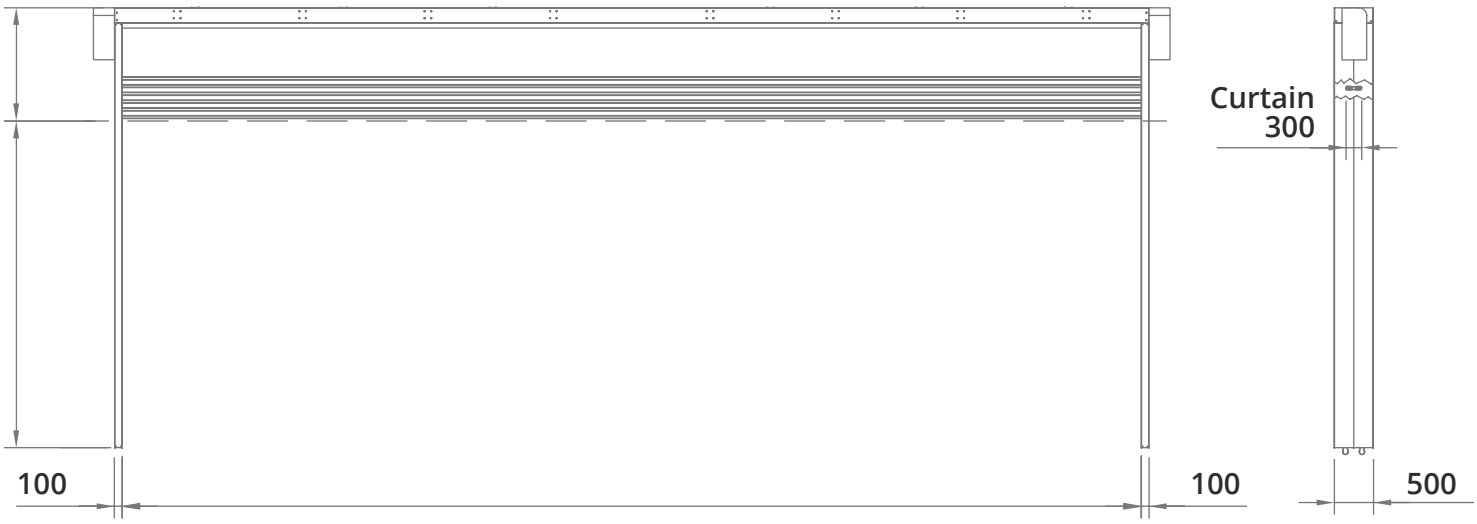

LOWER TRUSS

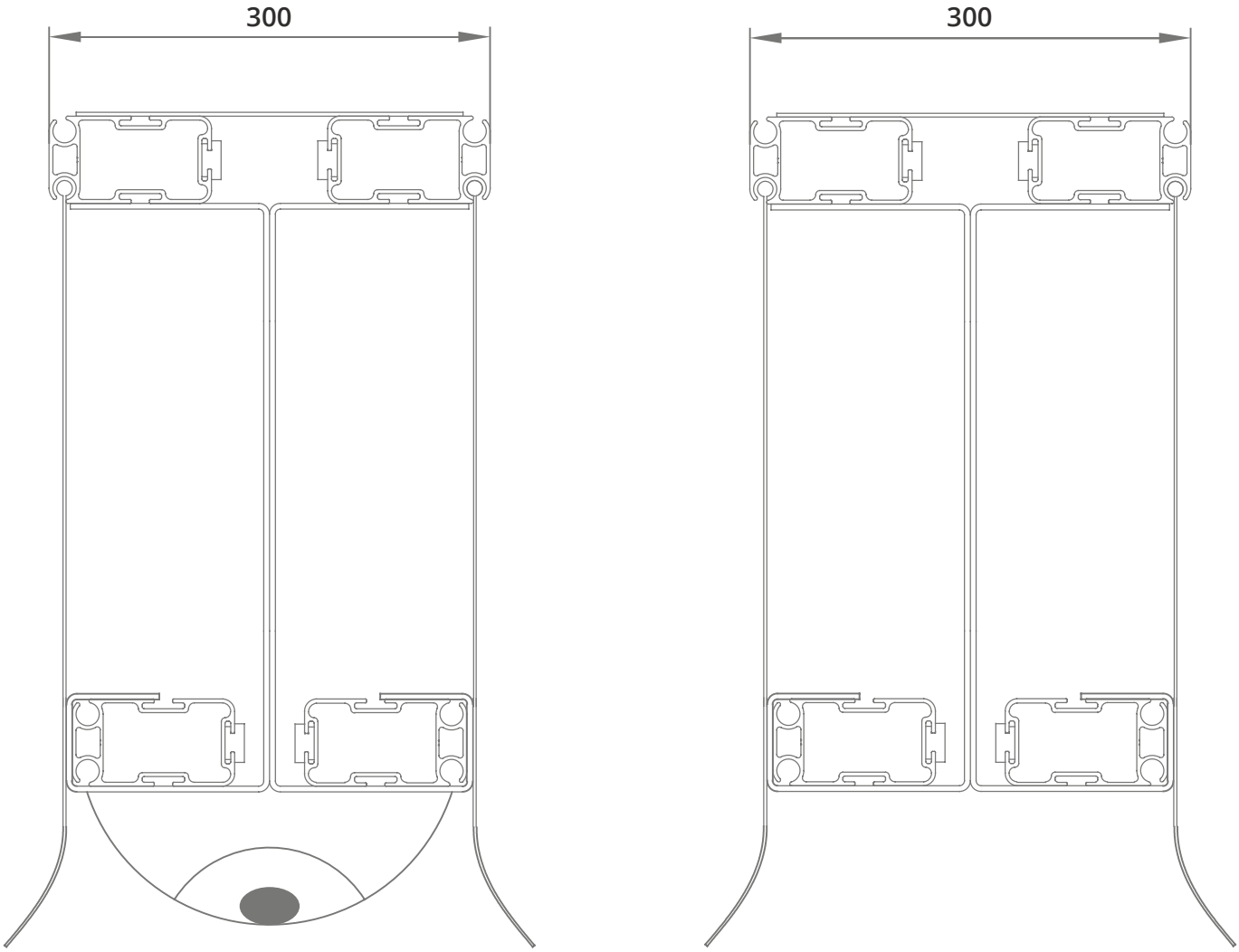

PVC CHARACTERISTICS

STANDARD PVC

Composition and tests

EXTERNAL SIDE			
Material	*Finishing*	*Color*	*Thick*
PVC	Opaque	18 standard	0,7 mm
FABRIC			
Material	*N. tarps*	*Title*	*EN 2286-2*
PES	1	1100Dtex 12x12	900 g/m²
INTERNAL SIDE			
Material	*Finishing*	*Color*	*Thick*
PVC	Rough	18 standard	0,2 mm

COLD RESISTANCE
ISO 4675/90
-50°C ±5

HYDROLYSIS TEST
75°C 95% humidity
none variation

GAS OIL TEST
-
none variation

MARINE WATER TEST
-
none variation

OZONE TEST
ISO 3011
none crack

T. STORAGE
(°C)
-30 +65

FLAME TEST
ISO 3795
< 100 mm/min

PERFORATION
RINA 3.A1.2.7
(N) > 100

EXERCISE 7 days -70°C
ISO 6065
none variation

Characteristics

THICK
ISO 2286/3
(mm) 0,9±0,1

WEIGHT
ISO 2286/2
(kg/m2) 0,90±0,1

LOAD BREAK
ISO 1421
6000 N/50mm

WARP EXTENSION
ISO 1421
4300 N/50mm

TEXTURE EXTENSION
ISO 1421
4000 N/50mm

WARP BREAK
dIN 53363
(N) > 600

TEXTURE BREAK
dIN 53363
(N) > 530

ADHESION
dIN EN ISO 2411
130 N/50mm

EEC CONFORMITY
-
Yes

SPECIFIC USE
industry, refrigerators, car washes, supermarkets, warehouses

ASSOCIATION
-

Colors

Translucent Antistatic available

INSULATED PVC

Composition and tests

EXTERNAL SIDE			
Material	*Finishing*	*Color*	*Thick*
PVC	Straight	6 standard	0,5 mm
FABRIC			
Material	*N. tarps*	*Title*	*EN 2286-2*
PES	1	1100Dtex 12x12	1350 g/m²
INTERNAL SIDE			
Material	*Finishing*	*Color*	*Thick*
PVC	Sponge	6 standard	7 mm

COLD RESISTANCE
ISO 4675/90
-10°C ±5

HYDROLYSIS TEST
75°C 95% humidity
none variation

GAS OIL TEST
-
none variation

MARINE WATER TEST
-
none variation

OZONE TEST
ISO 3011
none crack

T. STORAGE
(°C)
-30 +65

FLAME TEST
ISO 3795
cl 2, NFPA 701 test 2

PERFORATION
RINA 3.A1.2.7
(N) > 100

EXERCISE 7 days -70°C
ISO 6065
none variation

Characteristics

THICK
ISO 2286/3
(mm) 7,0±0,1

WEIGHT
ISO 2286/2
(kg/m2) 1,7±0,1

LOAD BREAK
ISO 1421
6000 N/50mm

WARP EXTENSION
ISO 1421/V1
3000 N/50mm

TEXTURE EXTENSION
ISO 1421/V1
2800 N/50mm

WARP BREAK
dIN 53363
300 N

TEXTURE BREAK
dIN 53363
300 N

ADHESION
PA 09.03 (internal)
15 N/cm

THERMAL CONDUCTIVITY
-
0,03782 W.m⁻¹

ISOLATION INDEX
-
Rw= 17,5 dB

EMPLOYMENT
industry, refrigerators, car washes, supermarkets, warehouses

ASSOCIATION
-

Colors

MEASUREMENT OF SOUNDPROOFING POWER
R - UNI EN ISO 10140-2 - UNI EN ISO 717-1

	Source	Receiver
Volume (m³)	86,0	70,5
Temp. (°C)	21,0	21,0
Volume (m³)	86,0	70,5

FREQ. Hz	R dB	U dB
100	14,9	1,8
125	7,5	1,7
160	8,2	1,5
200	8,7	1,6
250	8,8	1,3
315	8,6	1,2
400	10,7	1,2
500	11,7	1,1
630	13,5	1,1
800	15,4	1,1
1000	16,9	1,0
1250	18,8	1,0
1600	20,4	1,0
2000	21,2	1,0
2500	21,8	1,0
3150	22,6	1,0
4000	22,9	1,0
5000	23,0	1,0

Rw	17 dB
C	-1 dB
Ctr	-3 dB
K	2,00 - 95%

Evaluation according to ISO 717-1 in the band 100 ÷ 3150 Hz based on laboratory measurements

SAMPLE AREA
S = 1,50 *m*²

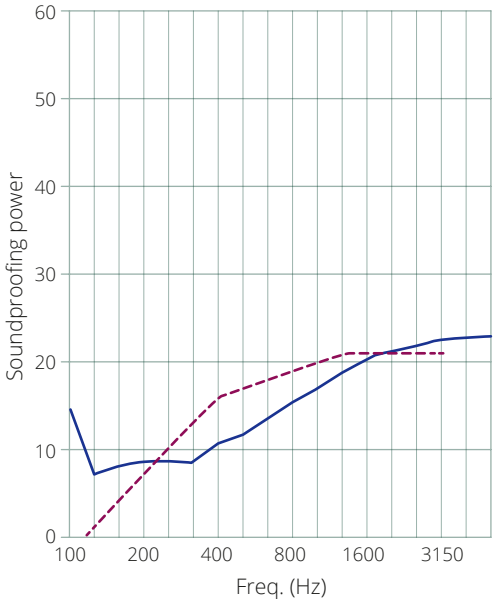

MODULAR PVC

INTERCHANGEABLE SECTOR

PVC curtains are composed of single sectors inside aluminum spinner profile.
This system allows an easier handling when a singular sector is damaged or worn, instead of changing the complete curtain.

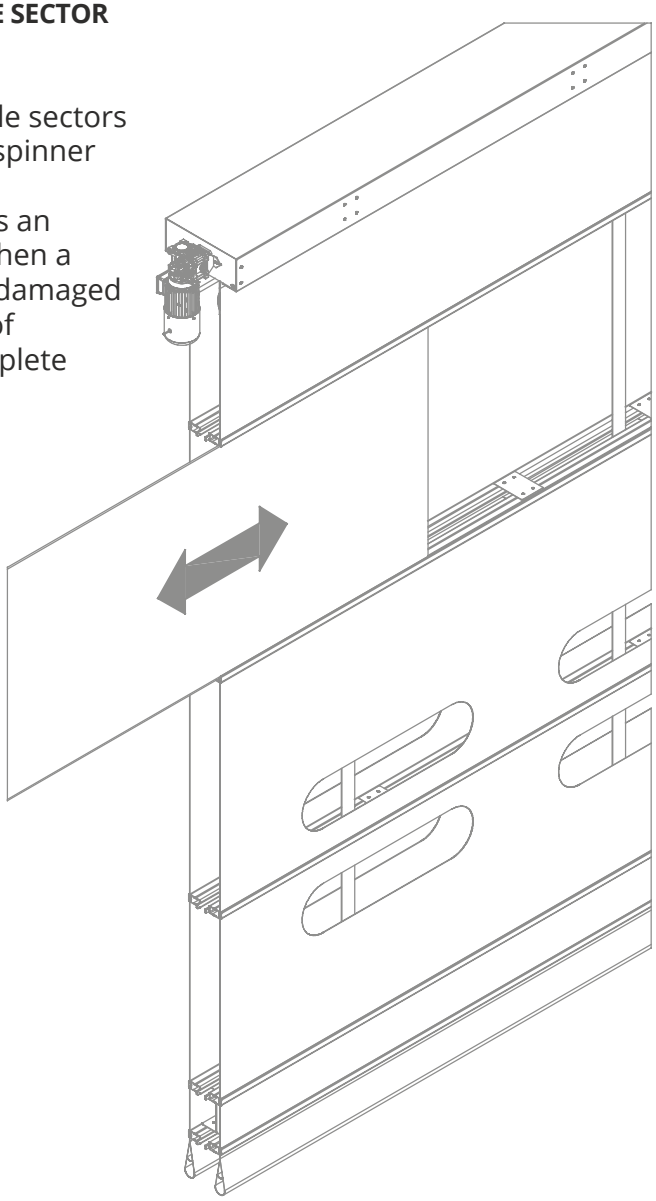

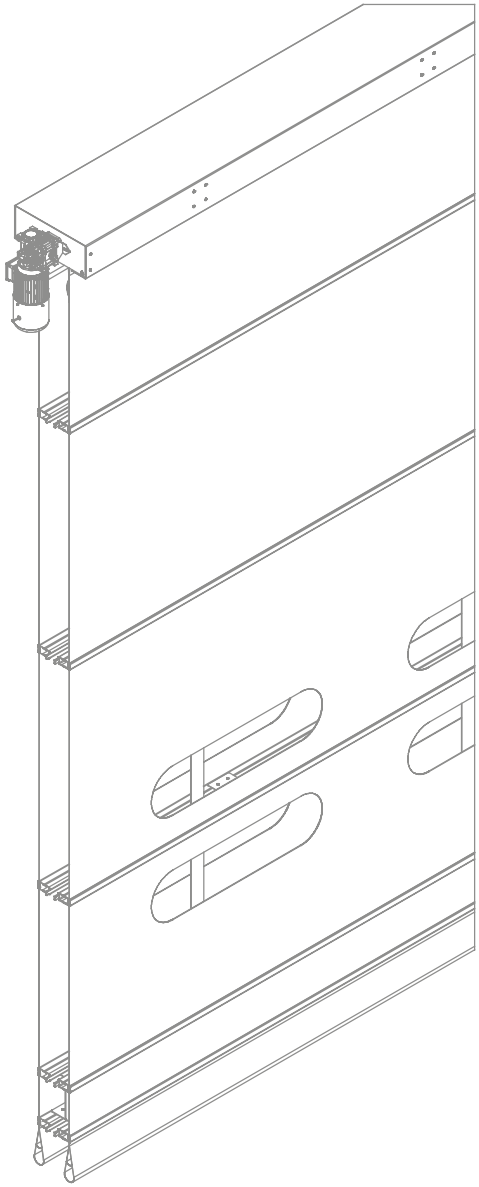

WIND LOAD CLASSIFICATION

WIND CLASS EN 12424	PRESSURE [PA - N/M2]	WIND SPEED m/s	WIND SPEED km/h	BEAUFORT
0	0	0	0	0
1	300	22	80	9
2	450	27	100	10
3	700	34	120	12
4	1000	41	150	13
5	> 1000			

Under project requirement

BEAUFORT	PRESSURE [PA - N/m²]	MEDIUM WIND SPEED m/s			EN 12424
		Knot	m/s	km/h	
0	0 - 0	0 – <1	0.0 – 0.2	0	0
1	0.1 - 0.1	1 – <4	0.3 – 1.5	1 – 5	1
2	2.0 - 5.9	4 – <7	1.6 – 3.3	6 – 11	1
3	6.9 - 17.7	7 – <11	3.4 – 5.4	12 – 19	1
4	18.6 - 38.3	11 – <16	5.5 – 7.9	20 – 28	1
5	39.2 - 70.6	16 – <22	8.0 – 10.7	29 – 38	1
6	71.6 - 116.7	22 – <28	10.8 – 13.8	39 – 49	1
7	117.7 - 179.5	28 – <34	13.9 – 17.1	50 – 61	1
8	180.5 – 262.9	34 – <41	17.2 – 20.7	62 – 74	1
9	263.9 – 364.9	41 – <48	20.8 – 24.4	75 – 88	1-2
10	366.9 – 495.4	48 – <56	24.5 – 28.4	89 – 102	2-3
11	496.4 – 652.4	56 – <64	28.5 – 32.6	103 – 117	3
12	653.3 – 836.7	> 64	32.7 – 36.9	118 – 133	3-4
13	837.8 – 1039.9	> 64	37.0 – 41.4	134 – 149	4-5

OPTIONAL ACCESSORIES

RADAR

OPENING POINT RADAR TOF/SPOT for internal use only

INFRARED RADAR with cross-movement adjustment

INFRARED RADAR motion and presence (pedestrian/forklift) radar

TRAFFIC LIGHTS

GREEN FIXED STANDARD traffic light

RED FIXED STANDARD traffic light

LED TRAFFIC LIGHT with countdown

LED TRAFFIC LIGHT BARRIERS (connection card included)

BUTTONS

OPENING GREEN BUTTON with box

OPENING BLACK BUTTON with box

FREEZE STOP BUTTON with box

NO TOUCH BUTTON

TRAFFIC LIGHT BUTTON DUAL-FUNCTION opening and intermittent door opening/closing signaling

WIND GAUGE

KEY SELECTOR

REMOTE CONTROL

BOLLARD B-PROTECT

PULL CORD SWITCH

MAGNETIC LOOP DETECTOR

Truss option

Quality products since 1997

BMP EUROPE HIGH SPEED DOORS
Strada della Freisa 1 - Villanova d'Asti 14019 (AT)
+39 0141 948843
www.bmpdoors.com - info@bmpeurope.eu

06/2024